Work Order ID 74139

Monday, September 26, 2011 8:57:19 AM

Item ID: D4034-041 **Accept** **Setup** **Start**

Revision ID: **Stop**

Item Name: Aft Upper Rib Assembly

Start Date: 9/27/2011 **Start Qty:** 3.00 **Cust Item ID:**

Required Date: 9/30/2011 **Req'd Qty:** 3.00 **Customer:**

Reference:

Approvals: **Process Plan:** MF **Date:** 11-09-26 **Tooling:** _____ **Date:** _____ **Run** **Start**

QC: _____ **Date:** _____ **SPC (Y/N):** _____ **Date:** _____ **Stop**

Sequence ID/ Work Center ID	Operation Description	Set Up/ Run Hours	Tool ID	Tool #	Plan Code	Accept Qty	Reject Qty	Reject Number	Insp. Stamp
Draw Nbr	**Revision Nbr**								
D4034	B								
100	Weld per dwg A/R S.S. rod Batch: M115778	0.00							
Large Fab	**Memo**	0.00							
Large Fab	1- Assemble ribs to hoop and weld as per dwg DT9564 2- Weld bushing in rib and grind weld flush as per dwg								
110	QC9- Inspect visual per QSI004- Fusion Welds	0.00							
QC	**Memo**	0.00							
Quality Control									
120	QC5- Inspect part completeness to step on W/O	0.00							
QC	**Memo**	0.00							
Quality Control									

SJ 11/10/07 3x

GC 11.10.07 3x

11/10/07 x3

Dart Aerospace Ltd

W/O:		WORK ORDER CHANGES					
DATE	STEP	PROCEDURE CHANGE	By	Date	Qty	Approval Chief Eng / Prod Mgr	Approval QC Inspector

Part No: _____ **PAR #:** _____ **Fault Category:** _____ **NCR:** Yes No **DQA:** _____ **Date:** _____

Resolution: _____ **Disposition:** _____ **QA: N/C Closed:** _____ **Date:** _____

NCR:		WORK ORDER NON-CONFORMANCE (NCR)						
DATE	STEP	Description of NC Section A	Corrective Action Section B			Verification Section C	Approval Chief Eng	Approval QC Inspector
			Initial Chief Eng	Action Description Chief Eng	Sign & Date			

NOTE: Date & initial all entries

H:\fFORMS\Quality Assurance\approved QA\NCRWO RevE

Work Order ID 74139

Monday, September 26, 2011 8:57:19 AM

Item ID: D4034-041 **Accept** **Setup Start**

Revision ID: **Stop**

Item Name: Aft Upper Rib Assembly

Start Date: 9/27/2011 **Start Qty:** 3.00 **Cust Item ID:**

Required Date: 9/30/2011 **Req'd Qty:** 3.00 **Customer:**

Reference:

Approvals: **Process Plan:** _____ **Date:** _____ **Tooling:** _____ **Date:** _____ **Run Start**

QC: _____ **Date:** _____ **SPC (Y/N):** _____ **Date:** _____ **Stop**

Sequence ID/ Work Center ID	Operation Description	Set Up/ Run Hours	Tool ID	Tool #	Plan Code	Accept Qty	Reject Qty	Reject Number	Insp. Stamp
130	Identify as per dwg & Stock Location:_____	0.00							
Packaging	Badgt cell								
Packaging	Memo	0.00							
							11/10/07		3x
140	QC21- Final Inspection - Work Order Release	0.00							
QC							11/10/13		
Quality Control	Memo	0.00							

MF 11-10-12

Dart Aerospace Ltd

W/O:		WORK ORDER CHANGES					
DATE	STEP	PROCEDURE CHANGE	By	Date	Qty	Approval Chief Eng / Prod Mgr	Approval QC Inspector

Part No: _____ **PAR #:** _____ **Fault Category:** _____ **NCR:** Yes No **DQA:** _____ **Date:** _____

Resolution: _____ **Disposition:** _____ **QA: N/C Closed:** _____ **Date:** _____

NCR:		WORK ORDER NON-CONFORMANCE (NCR)						
DATE	STEP	Description of NC Section A	Corrective Action Section B			Verification Section C	Approval Chief Eng	Approval QC Inspector
			Initial Chief Eng	Action Description Chief Eng	Sign & Date			

NOTE: Date & initial all entries

H:\fFORMS\Quality Assurance\approved QA\NCRWO RevE

Picklist Print

Monday, September 26, 2011 8:57:13 AM

Work Order ID: 74139

Parent Item: D4034-041

Parent Item Name: Aft Upper Rib Assembly

Start Date: 9/27/2011 **Required Date:** 9/30/2011

Start Qty: 3.00 **Required Qty:** 3.00

Comments: IPP RevA: new issue DD 09.11.23 verified by:EC IPP Rev:B as per dwg revA 10.03.15 verified by:EC IPP Rev:C 11.01.19 AS PER DWG REV.B DD VERF:EC

Component Item ID/ Item Name	Replacement Item ID	Mfg/ Purch	Bin Item	Primary Location	Last Location	Route Seq ID	Unit of Measure	Qty on Hand	Qty per Kit	Total Qty	Qty Issued	Date Issued	Status
✓ D4034-1 Rib		Manufactured	No			100	Each	4.0000	1	3	B74122 3x	SY 11/10/06	
				Location		**Loc Qty**		**Loc Code**					
				WA006		4							
					69014	4							
✳ D4034-3 Rib		Manufactured	No			100	Each	3.0000	1	3	B74123 3x	SY 11/10/06	
				Location		**Loc Qty**		**Loc Code**					
				WA		3							
					58408	0							
					72253	2							
					72962	1							
✓ D4021-7 Hoop		Manufactured	No			100	Each	11.0000	1	3	SY 11/10/06		
				Location		**Loc Qty**		**Loc Code**					
				WA005		11							
					72252	11					3x		

Dart Aerospace Ltd

W/O:		WORK ORDER CHANGES					
DATE	STEP	PROCEDURE CHANGE	By	Date	Qty	Approval Chief Eng / Prod Mgr	Approval QC Inspector

Part No: _____ **PAR #:** _____ **Fault Category:** _____ **NCR:** Yes No **DQA:** _____ **Date:** _____

Resolution: _____ **Disposition:** _____ **QA: N/C Closed:** _____ **Date:** _____

NCR:		WORK ORDER NON-CONFORMANCE (NCR)						
DATE	STEP	Description of NC Section A	Corrective Action Section B			Verification Section C	Approval Chief Eng	Approval QC Inspector
			Initial Chief Eng	Action Description Chief Eng	Sign & Date			

NOTE: Date & initial all entries

H:\FORMS\Quality Assurance\approved QA\NCRWO RevE

Picklist Print

Monday, September 26, 2011 8:57:14 AM

Work Order ID: 74139

Parent Item: D4034-041

Parent Item Name: Aft Upper Rib Assembly

Start Date: 9/27/2011 **Required Date:** 9/30/2011

Start Qty: 3.00 **Required Qty:** 3.00

D4021-9	Manufactured	No	100	Each	80.0000	4	12	SJ 11/10/06
Bushing								

Location		Loc Qty	Loc Code	
WA		78		
	70333	22		10x
	72482	56		2x
WA005		2		
	66437	2		

Dart Aerospace Ltd

W/O:		WORK ORDER CHANGES					
DATE	STEP	PROCEDURE CHANGE	By	Date	Qty	Approval Chief Eng / Prod Mgr	Approval QC Inspector

Part No: _____ **PAR #:** _____ **Fault Category:** _____ **NCR:** Yes No **DQA:** _____ **Date:** _____

Resolution: _____ **Disposition:** _____ **QA: N/C Closed:** _____ **Date:** _____

NCR:		WORK ORDER NON-CONFORMANCE (NCR)						
DATE	STEP	Description of NC Section A	Corrective Action Section B			Verification Section C	Approval Chief Eng	Approval QC Inspector
			Initial Chief Eng	Action Description Chief Eng	Sign & Date			

NOTE: Date & initial all entries

H:\fFORMS\Quality Assurance\approved QA\NCRWO RevE

ITEM	QTY -041	QTY -043	P/N	DESCRIPTION	
	X		D4034-041	AFT UPPER RIB ASSY	B
		X	D4034-043	FWD UPPER RIB ASSY	
1	1	1	D4034-1	RIB	
2	1		D4034-3	RIB	B
3		1	D4034-5	RIB	
4		1	D2327-3	SPACER BUSHING	
5	1	1	D4021-7	HOOP	
6	4		D4021-9	BUSHING	B

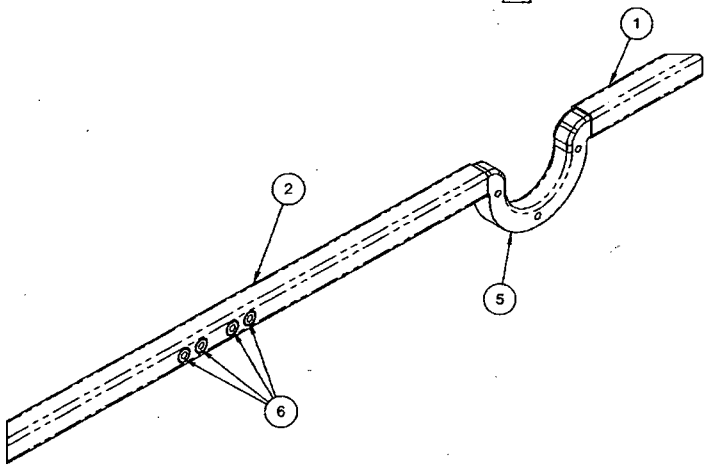

D4034-041 AFT UPPER RIB ASSY B

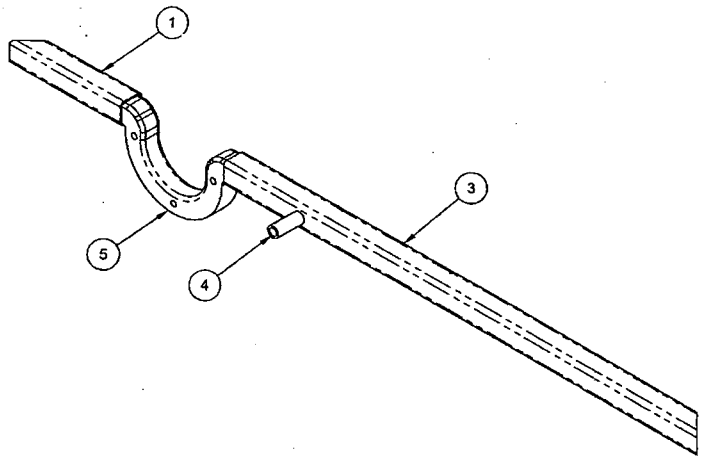

D4034-043 FWD UPPER RIB ASSY

RELEASED
2011 -01- 18

#7413

REV.	DESCRIPTION	BY	DATE
B	ADDITIONAL HOLES ADDED ON D4034-3 RIB	SC	10.12.20
A	NEW ISSUE	AJS	10.03.04

DESIGN	AJS	**DART AEROSPACE LTD** HAWKESBURY, ONTARIO, CANADA
DRAWN	SC	
CHECKED		DRAWING NO. D4034 — REV. B — SHEET 1 OF 4
MFG. APPR.		
APPROVED		TITLE: UPPER RIB ASSY, BASKET BASE — SCALE: NTS
DE APPR.		
DATE	10.12.20	

COPYRIGHT © 2010 BY DART AEROSPACE LTD
THIS DOCUMENT IS PRIVATE AND CONFIDENTIAL AND IS SUPPLIED ON THE EXPRESS CONDITION THAT IT IS NOT TO BE USED FOR ANY PURPOSE OR COPIED OR COMMUNICATED TO ANY OTHER PERSON WITHOUT WRITTEN PERMISSION FROM DART AEROSPACE LTD.

Dart Aerospace Ltd

W/O:		WORK ORDER CHANGES					
DATE	STEP	PROCEDURE CHANGE	By	Date	Qty	Approval Chief Eng / Prod Mgr	Approval QC Inspector

Part No: _____ **PAR #:** _____ **Fault Category:** _____ **NCR:** Yes No **DQA:** _____ **Date:** _____

Resolution: _____ **Disposition:** _____ **QA: N/C Closed:** _____ **Date:** _____

NCR:		WORK ORDER NON-CONFORMANCE (NCR)						
DATE	STEP	Description of NC Section A	Corrective Action Section B			Verification Section C	Approval Chief Eng	Approval QC Inspector
			Initial Chief Eng	Action Description Chief Eng	Sign & Date			

NOTE: Date & initial all entries

H:\FORMS\Quality Assurance\approved QA\NCRWO RevE

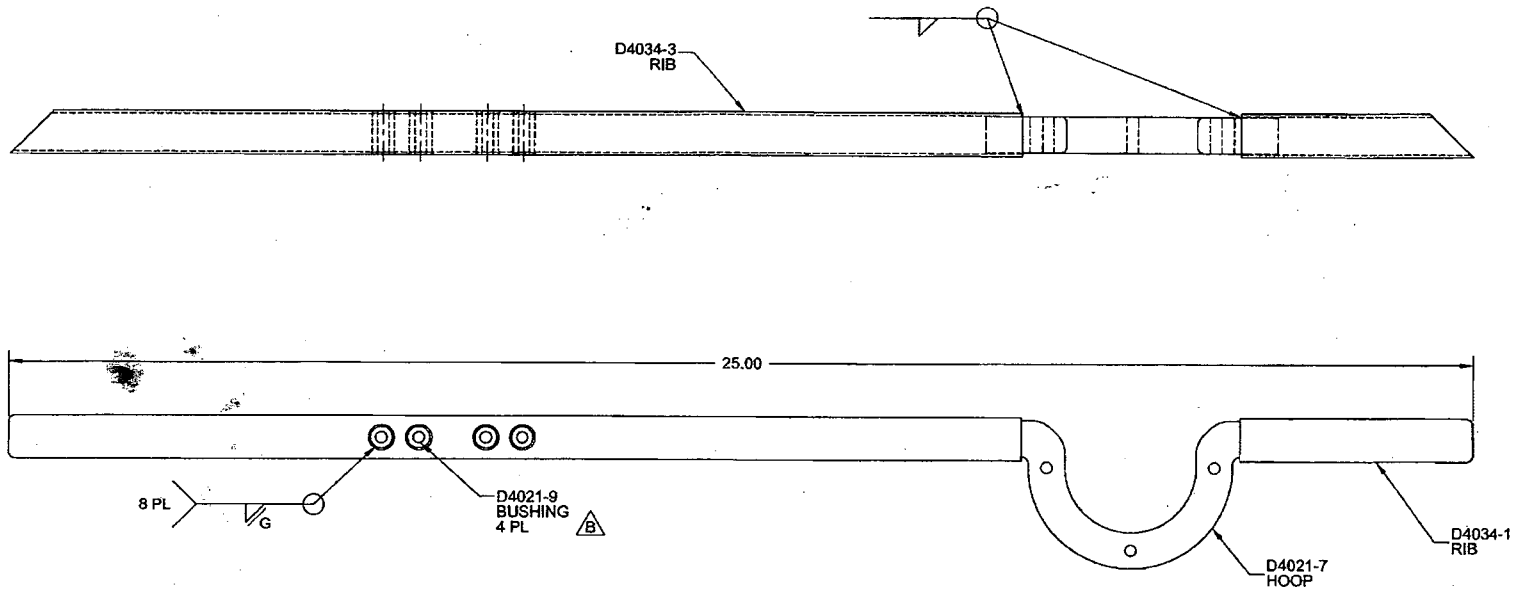

D4034-041 AFT UPPER RIB ASSY B

RELEASED
2011 -01- 18

#74139

NOTES:
1) MATERIAL: N/A
2) FINISH: NONE
3) TOLERANCES: PER DART QSI 018 UNLESS OTHERWISE NOTED
4) UNITS: INCHES UNLESS OTHERWISE NOTED
5) BREAK SHARP EDGES: 0.005 TO 0.010 MAX
6) IDENTIFICATION: N/A
7) WEIGHT: 1.61 lbs
8) WELD PER DART QSI 004

DESIGN	AJS	DART AEROSPACE LTD HAWKESBURY, ONTARIO, CANADA
DRAWN	SC	
CHECKED		DRAWING NO. D4034 — REV. B — SHEET 2 OF 4
MFG. APPR.		
APPROVED		TITLE: UPPER RIB ASSY, BASKET BASE — SCALE: NTS
DE APPR.		
DATE	10.12.20	

COPYRIGHT © 2010 BY DART AEROSPACE LTD
THIS DOCUMENT IS PRIVATE AND CONFIDENTIAL AND IS SUPPLIED OR THE EXPRESS CONDITION THAT IT IS NOT TO BE USED FOR ANY PURPOSE OR COPIED OR COMMUNICATED TO ANY OTHER PERSON WITHOUT WRITTEN PERMISSION FROM DART AEROSPACE LTD.

Dart Aerospace Ltd

W/O:		WORK ORDER CHANGES					
DATE	STEP	PROCEDURE CHANGE	By	Date	Qty	Approval Chief Eng / Prod Mgr	Approval QC Inspector

Part No: _____ **PAR #:** _____ **Fault Category:** _____ **NCR:** Yes No **DQA:** _____ **Date:** _____

Resolution: _____ **Disposition:** _____ **QA: N/C Closed:** _____ **Date:** _____

NCR:		WORK ORDER NON-CONFORMANCE (NCR)						
DATE	STEP	Description of NC Section A	Corrective Action Section B			Verification Section C	Approval Chief Eng	Approval QC Inspector
			Initial Chief Eng	Action Description Chief Eng	Sign & Date			

NOTE: Date & initial all entries

H:\fFORMS\Quality Assurance\approved QA\NCRWO RevE

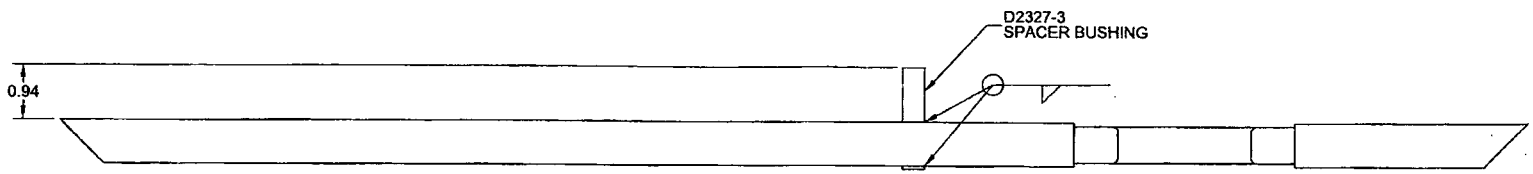

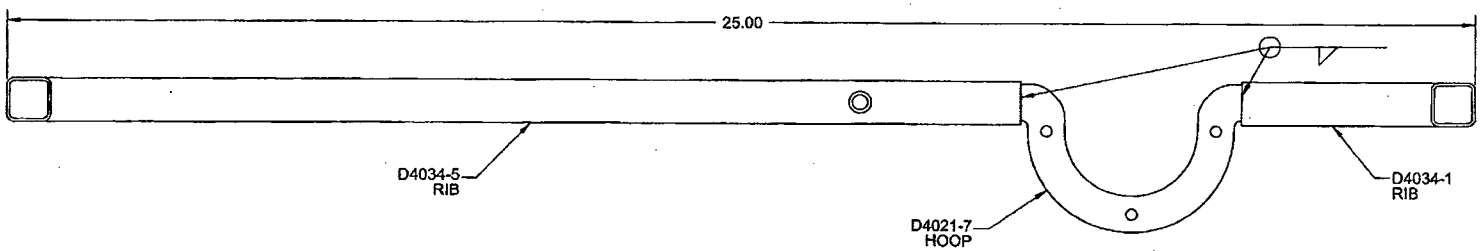

D4034-043 FWD UPPER RIB ASSY

#74139

RELEASED
2011 -01- 18

NOTES:
1) MATERIAL: N/A
2) FINISH: NONE
3) TOLERANCES: PER DART QSI 018 UNLESS OTHERWISE NOTED
4) UNITS: INCHES UNLESS OTHERWISE NOTED
5) BREAK SHARP EDGES: 0.005 TO 0.010 MAX
6) IDENTIFICATION: N/A
7) WEIGHT: 1.58 lbs
8) WELD PER DART QSI 004

DESIGN	AJS	DART AEROSPACE LTD HAWKESBURY, ONTARIO, CANADA
DRAWN	SC	
CHECKED		DRAWING NO. D4034 — REV. B — SHEET 3 OF 4
MFG. APPR.		
APPROVED		TITLE: UPPER RIB ASSY, BASKET BASE — SCALE: NTS
DE APPR.		
DATE	10.12.20	

COPYRIGHT © 2010 BY DART AEROSPACE LTD
THIS DOCUMENT IS PRIVATE AND CONFIDENTIAL AND IS SUPPLIED ON THE EXPRESS CONDITION THAT IT IS NOT TO BE USED FOR ANY PURPOSE OR COPIED OR COMMUNICATED TO ANY OTHER PERSON WITHOUT WRITTEN PERMISSION FROM DART AEROSPACE LTD

Dart Aerospace Ltd

W/O:		WORK ORDER CHANGES					
DATE	STEP	PROCEDURE CHANGE	By	Date	Qty	Approval Chief Eng / Prod Mgr	Approval QC Inspector

Part No: _____ **PAR #:** _____ **Fault Category:** _____ **NCR:** Yes No **DQA:** _____ **Date:** _____

Resolution: _____ **Disposition:** _____ **QA: N/C Closed:** _____ **Date:** _____

NCR:		WORK ORDER NON-CONFORMANCE (NCR)						
DATE	STEP	Description of NC Section A	Corrective Action Section B			Verification Section C	Approval Chief Eng	Approval QC Inspector
			Initial Chief Eng	Action Description Chief Eng	Sign & Date			

NOTE: Date & initial all entries

H:\fFORMS\Quality Assurance\approved QA\NCRWO RevE

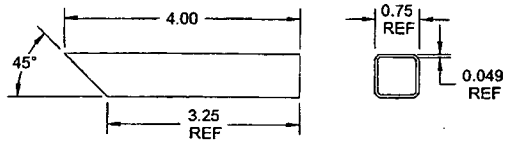

D4034-1 RIB

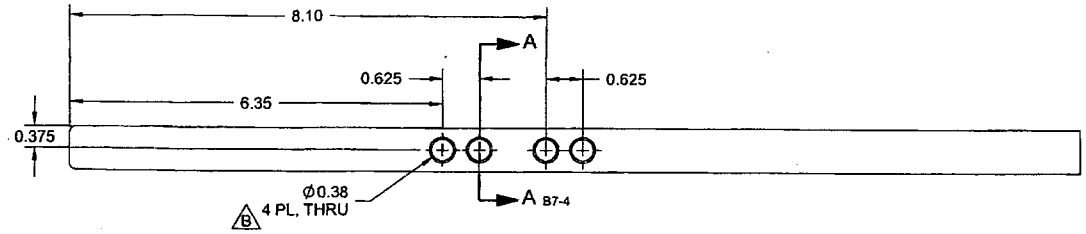

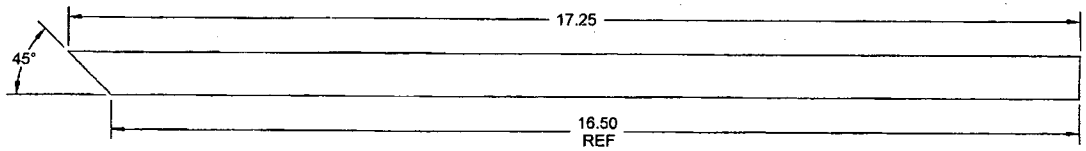

D4034-3 RIB

+ 74139

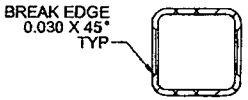

SECTION A-A D4-4

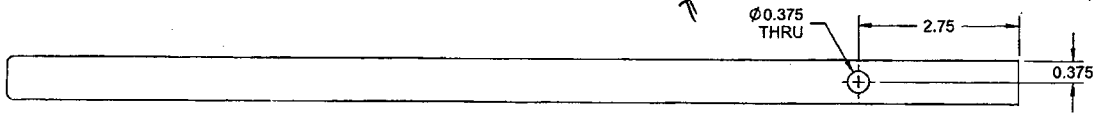

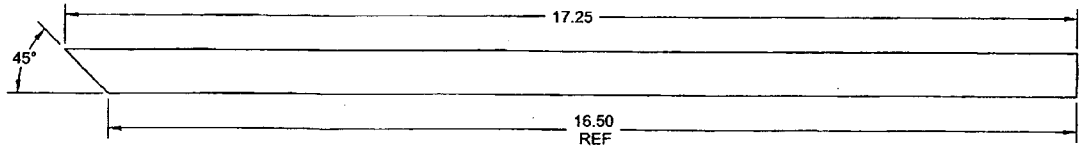

D4034-5 RIB

RELEASED
2011 -01- 10

NOTES:
1) MATERIAL: AISI 304/316 STAINLESS STEEL SQUARE TUBE, 0.75 X 0.75 X 0.049 WALL
REF DART SPEC. M304TS0.750W.049
2) FINISH: NONE
3) TOLERANCES: PER DART QSI 018 UNLESS OTHERWISE NOTED
4) UNITS: INCHES UNLESS OTHERWISE NOTED
5) BREAK SHARP EDGES: 0.005 TO 0.010 MAX
6) IDENTIFICATION: N/A
7) WEIGHT -1: 0.13 lbs
-3 & -5: 0.62 lbs

DESIGN	AJS	**DART AEROSPACE LTD** HAWKESBURY, ONTARIO, CANADA
DRAWN	SC	
CHECKED		DRAWING NO. D4034 — REV. B — SHEET 4 OF 4
MFG. APPR.		
APPROVED		TITLE: UPPER RIB ASSY, BASKET BASE — SCALE: NTS
DE APPR.		
DATE	10.12.20	

COPYRIGHT © 2010 BY DART AEROSPACE LTD
THIS DOCUMENT IS PRIVATE AND CONFIDENTIAL AND IS SUPPLIED ON THE EXPRESS CONDITION THAT IT IS NOT TO BE USED FOR ANY PURPOSE OR COPIED OR COMMUNICATED TO ANY OTHER PERSON WITHOUT WRITTEN PERMISSION FROM DART AEROSPACE LTD.

Dart Aerospace Ltd

W/O:		WORK ORDER CHANGES					
DATE	STEP	PROCEDURE CHANGE	By	Date	Qty	Approval Chief Eng / Prod Mgr	Approval QC Inspector

Part No: _____ **PAR #:** _____ **Fault Category:** _____ **NCR:** Yes No **DQA:** _____ **Date:** _____

Resolution: _____ **Disposition:** _____ **QA: N/C Closed:** _____ **Date:** _____

NCR:		WORK ORDER NON-CONFORMANCE (NCR)						
DATE	STEP	Description of NC Section A	Corrective Action Section B			Verification Section C	Approval Chief Eng	Approval QC Inspector
			Initial Chief Eng	Action Description Chief Eng	Sign & Date			

NOTE: Date & initial all entries

H:\fFORMS\Quality Assurance\approved QA\NCRWO RevE